SPIN

Glass Shelf 150mm

7 YEAR WARRANTY

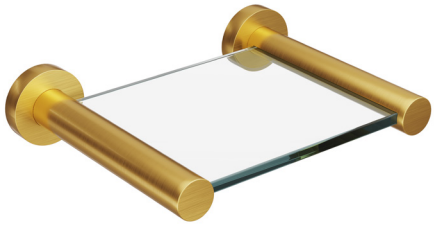

Brushed Brass

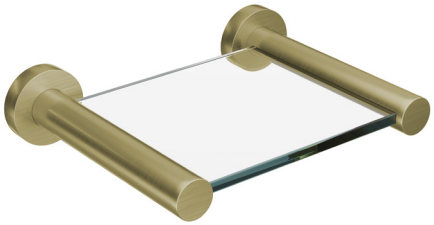

Brushed Champagne Gold

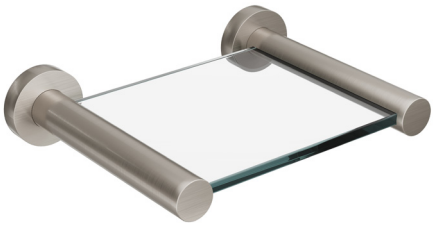

Brushed Nickel

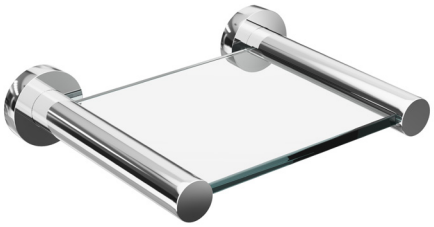

Chrome

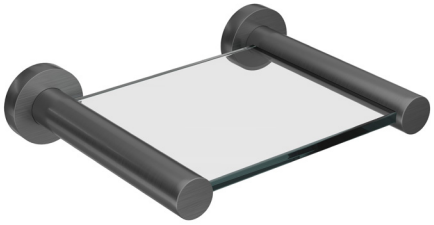

Gunmetal



Matte Black

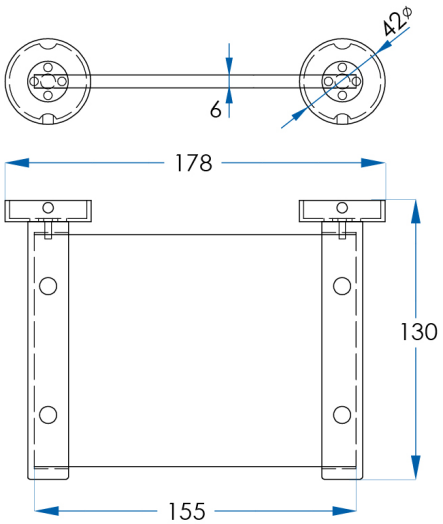

CODE	FINISH
SP53-150-BB	Brushed Brass
SP53-150-BG	Brushed Champagne Gold
SP53-150-BN	Brushed Nickel
SP53-150-CH	Chrome
SP53-150-GM	Gunmetal
SP53-150-MB	Matte Black

SPECIFICATIONS

Material	Solid Brass Construction
Includes	Glass Shelf, Brass Fixings & Rail, Allen Key
Warranty	7 year replacement product and parts

CASA LUSSO

Due to our policy of continuous development, all designs and measurements are intended only as a guide and are subject to change without notice. Being hand made products they are subject to a size variance E&OE. This brochure is representative of the actual products at time of printing. Please confirm all particulars before purchase. Casa Lusso recommends having the product on site before commencing rough in.

Available at

hb Highgrove Bathrooms

www.highgrovebathrooms.com.au